22-Dec-25

To

M/S. FARIHA KNIT TEX LTD
DHAKA,
BANGLADESH.

[Proposal No: 22.Dec.2025/WTT-1032/BAN/NP-STP/250K/R0/TCP]

Dear Sir,

WTT International Private Limited (WTT) is pleased to provide **M/s. FARIHA KNIT TEX LTD** with the Techno Commercial Proposal for supply of engineering & materials for **Sewage Treatment Plant of capacity 250 M^3/Day with Foundational limit during Phase-1, Progressive limit during Phase-2 and ZLD based Treatment scheme during Phase-3.** In developing this offer WTT worked with you in an effort to understand your project and business needs. The attached proposal outlines the solutions we feel will best meet these objectives.

We greatly appreciate your consideration of WTT for this project. Our measure of success is how well we deliver solutions that help our client to meet their critical business objectives. We hope to have the opportunity to demonstrate this with your good selves.

Yours Sincerely,

D. Venkatesh
Managing Director

S.NO	DESCRIPTION	PREPARED	APPROVED
1.	Techno Commercial Proposal for – "Sewage Treatment Plant of capacity 250 M^3/Day with Foundational limit during Phase-1, Progressive limit during Phase-2 and ZLD based Treatment scheme during Phase-3".	MM - GET AR - AGM	DV - MD

CONFIDENTIALITY

All details, specifications, drawings, images, and all other information submitted by us are only intended to the person/organization to which it is addressed and contains proprietary, confidential and or privileged material. Any review, retransmission, dissemination, or other use of, or of taking action in reliance upon this information by person or entities other than the intended recipient is prohibited. All or part information contained in the document is solely intended to the person or entity addresses and sharing this document in part or in whole is prohibited.

WE FEEL DELIGHTED TO PRESENT OUR PATENTED SYSTEMS

CONTENT

1. Technical and Engineering Details 5
1.1. INFLUENT FLOW DATA 5
1.2. INFLUENT QUALITY 5
2. Design Basis 6
2.1. DESIGN SYSTEM CHOSEN 6
2.2. PROCESS COMPATIBILITY 7
2.3. EXPECTED TREATED WATER QUALITY 11
3. Equipment Details for Proposed Systems 14
3.1. ROTARY BRUSH SCREENER 14
3.2. DISSOLVED AIR FLOTATION (DAF) SYSTEM 15
3.3. EQUALIZATION SYSTEM 15
3.4. NEUTRALIZATION SYSTEM 15
3.5. DENITRIFICATION SYSTEM 15
3.6. BIOLOGICAL OXIDATION SYSTEM 16
3.7. LAMELLA SETTLER 16
3.8. DISINFECTION SYSTEM 17
3.9. SCREW PRESS SYSTEM 17
3.10. SUBMERGED CERAMIC MBR SYSTEM 17
3.11. REVERSE OSMOSIS SYSTEM 18
4. Equipment Scope of Supply – BY WTT 19
5. Scope of Supply & Installation - BY CLIENT 24
6. Typical Equipment Vendor List 27
7. Pricing Detail 29
8. Happy Customers 30
9. Channel Partners 30
10. Process Description Video 30
11. Commercial Terms and Conditions 31
11.1. TAXES 31
11.2. FREIGHT 31

11.3. INVOICING AND PAYMENT TERMS 31
11.4. EQUIPMENT SHIPMENT 31
11.5. FORCE MAJEURE 32
11.6. PRICING NOTES 32
12. CLIENT SCOPE OF SUPPLY 32
12.1. SAFETY AND ENVIRONMENTAL 32
12.2. JOBSITE AND INSTALLATION REVIEW 33
12.3. START-UP AND COMMISSIONING 34
12.4. FACILITY MANAGEMENT 35
12.5. CONDITIONAL OFFERING 35
13. APPENDIX 36
13.1. APPENDIX A: CLARIFICATIONS 36
13.2. APPENDIX C: WARRANTY 36

1. Technical and Engineering Details

1.1. Influent Flow Data

STREAM	FEED FLOW RATE	UNIT
STP INLET (DURING PHASE – 1, 2 & 3)	250	M^3/DAY

1.2. Influent Quality

S.NO	PARAMETER	UNIT	STP INLET
1.	pH	--	8 – 9
2.	BOD	mg/L	300
3.	COD	mg/L	700
4.	TDS	mg/L	1500
5.	TSS	mg/L	200
6.	REACTIVE SILICA	mg/l	10
7.	TKN	mg/L	60
8.	PVA	mg/L	NIL
9.	IRON	mg/L	NIL
10.	SULPHATE	mg/L	380
11.	CHLORIDE	mg/L	380
12.	HARDNESS	mg/L of $CaCO_3$	200
13.	ALKALINITY	mg/L of $CaCO_3$	200
14.	TEMPERATURE	ºC	30 – 35
15.	OIL & GREASE	mg/L	10
16.	OTHER HEAVY METALS *	mg/L	NIL

*The *Parametrical values have been considered for the purpose of designing the treatment system. Any change in these values will impact design & cost of the STP.*

The design solution proposed is based on the values as presented in the table above at **STP Inlet (During phase – 1, 2 & 3).** All concentrations refer to max concentrations to be used for the system's design. **Any change in the actual inlet parameters will have impact on Process Design, Engineering Design, Cost and Performance.**

2. Design Basis

2.1. Design System Chosen

S.NO	SYSTEM/EQUIPMENT	CAPACITY (M^3/DAY)	PURPOSE OF THE SYSTEM/EQUIPMENT PROPOSED
DURING PHASE – 1			
1.	ROTARY BRUSH SCREENER	250	TO REMOVE COARSE PARTICLES FROM THE EFFLUENT WATER
2.	LIFTING PUMP	250	TO TRANSFER THE EFFLUENT FROM A LOWER ELEVATION TO THE DAF SYSTEM
3.	DISSOLVED AIR FLOTATION (DAF) SYSTEM	250	TO REMOVE FREE OIL & GREASE FROM THE EFFLUENT WATER
4.	EQUALIZATION SYSTEM	250	TO BALANCE FLOW AND LOAD VARIATIONS BEFORE FURTHER TREATMENT
5.	NEUTRALIZATION SYSTEM	250	TO MAINTAIN OPTIMUM pH IN THE BIOLOGICAL OXIDATION SYSTEM
6.	DE-NITRIFICATION SYSTEM	250	TO CONVERT AMMONIACAL NITROGEN INTO NITROGEN GAS
7.	BIOLOGICAL OXIDATION SYSTEM	250	TO BIOLOGICALLY DEGRADE ORGANIC POLLUTANTS USING MICRO-ORGANISMS
8.	LAMELLA SETTLER	250	FOR EFFICIENT SEPARATION OF SOLIDS FROM THE TREATED EFFLUENT WATER
9.	DISINFECTION SYSTEM	250	TO ELIMINATE HARMFUL MICRO-ORGANISMS FROM THE TREATED EFFLUENT WATER
10.	SCREW PRESS SYSTEM	250	TO DEWATER SLUDGE BY COMPRESSING AND SEPARATING WATER FROM SOLIDS
ADDITIONAL SYSTEMS ADDED DURING PHASE – 2			
11.	SUBMERGED CERAMIC MBR SYSTEM	250	TO REDUCE FOULING POTENTIAL OF RO FEED WATER
ADDITIONAL SYSTEMS ADDED DURING PHASE – 3			
12.	REVERSE OSMOSIS SYSTEM	250	TO ACHIEVE RECOVERY OF **90% IN 3 ARRAYS WITH SINGLE SKID**

<u>NOTE:</u> System capacities mentioned above are based on STP influent flow Rate and the Actual capacities may vary.

2.2. PROCESS COMPATIBILITY

1. The incoming raw wastewater shall not contain any substance incompatible with the MOC of the Equipment supplied & inhibitory substances that sufficiently affect the biological treatment stage so as to compromise the operation of any of the system.

2. The biological treatment is operated and maintained in accordance with good industry practice for wastewater treatment systems.

3. The Rotary Brush Screener at the plant inlet are installed and operated in such a way that fibrous material and floatable particles are removed reliably and any bypasses of the screens are impossible.

DURING PHASE – 1:

PROPOSED WATER BALANCE

SEWAGE TREATMENT PLANT FOR 250 M^3/DAY @1500 TDS

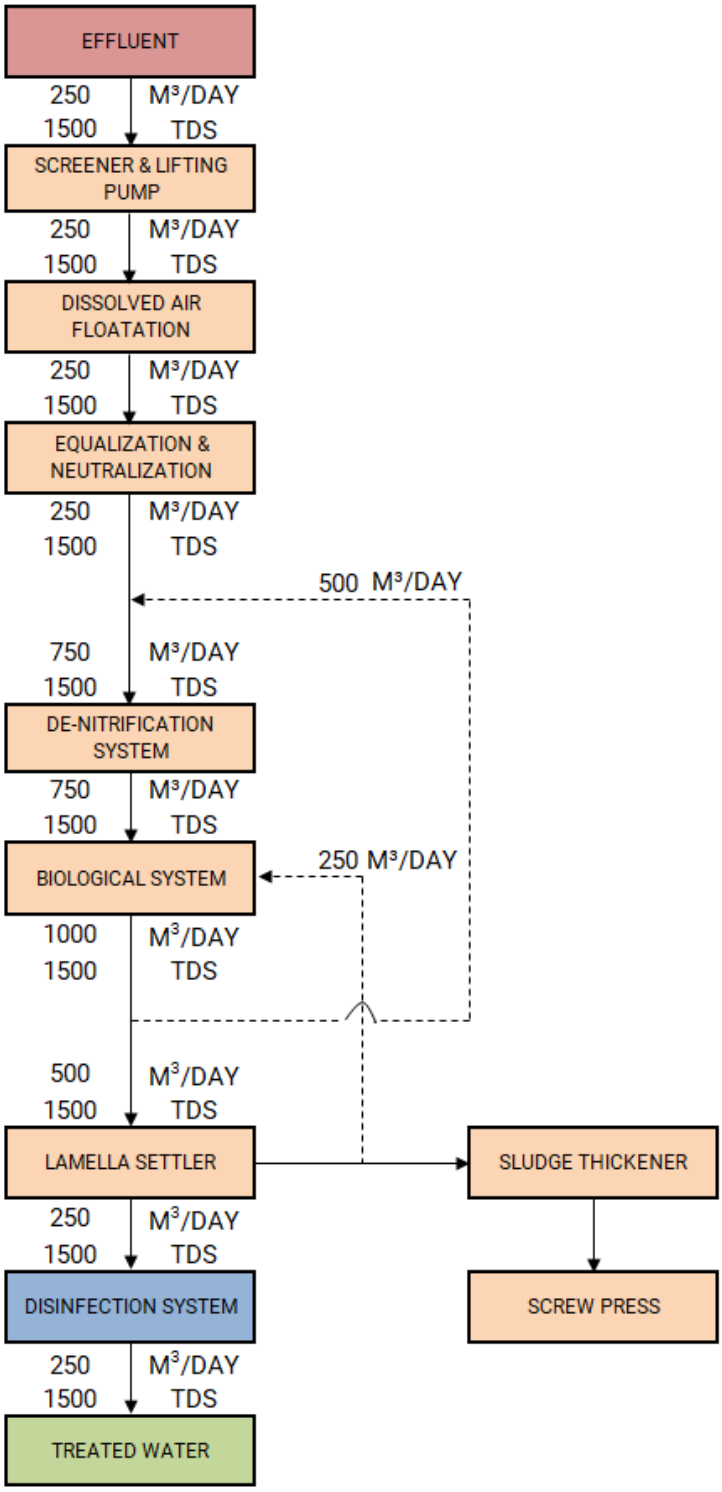

DURING PHASE – 2:

PROPOSED WATER BALANCE

SEWAGE TREATMENT PLANT FOR 250 M^3/DAY @1500 TDS

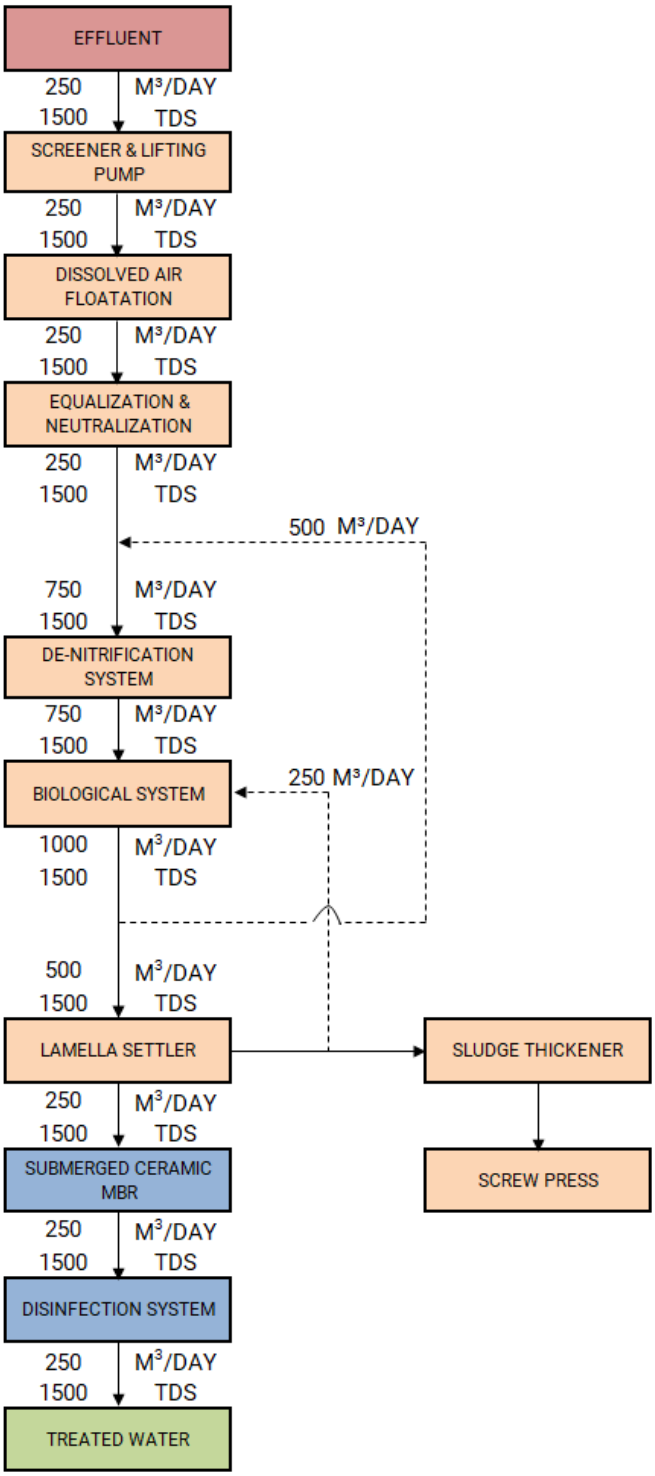

DURING PHASE – 3:

PROPOSED WATER BALANCE

SEWAGE TREATMENT PLANT FOR 250 M³/DAY @1500 TDS

SYSTEM	RECOVERY
RO	90%

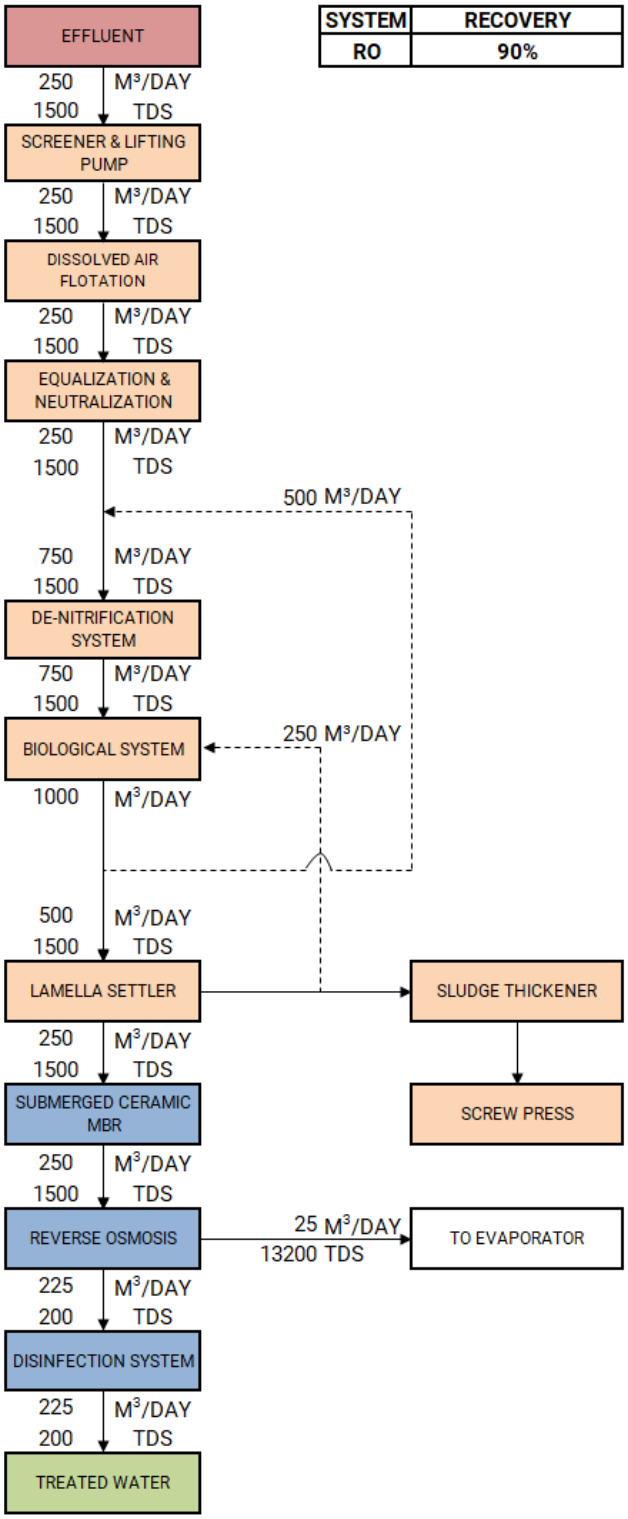

2.3. EXPECTED TREATED WATER QUALITY

The following performance parameters are expected under standard operating conditions after equipment start-up based on the data and assumptions listed above and in Appendix, Warranties. In case of conflicting numbers, the ones listed under Appendix take precedence:

STP – STAGEWISE PARAMETER (DURING PHASE – 1)				
PARAMETER	**UNIT**	**STP INLET**	**LAMELLA SETTLER OUTLET**	**TREATED WATER**
pH	--	8 – 9	6 – 7	6 – 7
BOD	mg/L	300	< 30 *	< 25 *
COD	mg/L	700	< 70 *	< 60 *
TDS	mg/L	1500	SAME AS INLET@	SAME AS INLET@
TSS	mg/L	200	< 50	< 50
REACTIVE SILICA	mg/l	10	SAME AS INLET	SAME AS INLET
TKN	mg/L	60	< 6 *	< 6 *
PVA	mg/L	NIL	NIL	NIL
IRON	mg/L	NIL	NIL	NIL
SULPHATE	mg/L	380	SAME AS INLET	SAME AS INLET
CHLORIDE	mg/L	380	SAME AS INLET	SAME AS INLET
HARDNESS	mg/L of $CaCO_3$	200	SAME AS INLET	SAME AS INLET
ALKALINITY	mg/L of $CaCO_3$	200	SAME AS INLET	SAME AS INLET
TEMPERATURE	ºC	30 – 35	30 – 35	30 – 35
OIL & GREASE	mg/L	10	< 1	< 1
OTHER HEAVY METALS	mg/L	NIL	NIL	NIL

BDL – below detectable limit, NA – not applicable; Values are system generated which may vary with variation in inlet & on operational basis

* Depends on the Biological Degradability of the Effluent, considering **12 Hours of Retention time for Biological Treatment** with **6 meters** of water depth and **available form of solubility.**

@ If TDS levels rise in the future due to hypochlorite dosing, we will recommend installing a UV system. The hypochlorite consumption and resulting TDS increase will depend on the specific water characteristics.

STP – STAGEWISE PARAMETER (DURING PHASE – 2)				
PARAMETER	**UNIT**	**STP INLET**	**SUBMERGED CERAMIC MBR**	**TREATED WATER**
pH	--	8 – 9	6 – 7	6 – 7
BOD	mg/L	300	< 20 *	< 15 *
COD	mg/L	700	< 50 *	< 40 *
TDS	mg/L	1500	SAME AS INLET@	SAME AS INLET@
TSS	mg/L	200	< 5	< 50
REACTIVE SILICA	mg/l	10	SAME AS INLET	SAME AS INLET
TKN	mg/L	60	< 3 *	< 3 *
PVA	mg/L	NIL	NIL	NIL
IRON	mg/L	NIL	NIL	NIL
SULPHATE	mg/L	380	SAME AS INLET	SAME AS INLET
CHLORIDE	mg/L	380	SAME AS INLET	SAME AS INLET
HARDNESS	mg/L of $CaCO_3$	200	SAME AS INLET	SAME AS INLET
ALKALINITY	mg/L of $CaCO_3$	200	SAME AS INLET	SAME AS INLET
TEMPERATURE	ºC	30 – 35	30 – 35	30 – 35
OIL & GREASE	mg/L	10	BDL *	BDL *
OTHER HEAVY METALS	mg/L	NIL	NIL	NIL

*** Discharge water's parameter reaches the Progressive Limit during Phase – 2 it may be to reach the Aspirational Limit** depends on the Biological Degradability of the Effluent, considering **12 Hours of Retention time for Biological Treatment** with **6 meters** of water depth, **available form of solubility and Site Condition. This could be evaluated only during the plant operation.**

@ **If TDS levels rise in the future due to hypochlorite dosing, we will recommend installing a UV system. The hypochlorite consumption and resulting TDS increase will depend on the specific water characteristics.**

STP – STAGEWISE PARAMETER (DURING PHASE – 3)				
PARAMETER	UNIT	STP INLET	REVERSE OSMOSIS @ 90% RECOVERY	
			PERMEATE	REJECT
pH	--	8 – 9	5 – 6	6.5 – 7
BOD	mg/L	300	BDL *	< 200 *
COD	mg/L	700	BDL *	< 500 *
TDS	mg/L	1500	< 200@	13000 – 14000
TSS	mg/L	200	BDL *	NA *
REACTIVE SILICA	mg/l	10	< 2	< 110
TKN	mg/L	60	BDL*	< 30 *
PVA	mg/L	NIL	NIL	NIL
IRON	mg/L	NIL	NIL	NIL
SULPHATE	mg/L	380	< 25	5000 – 6000
CHLORIDE	mg/L	380	< 65	3000 – 4000
HARDNESS	mg/L of $CaCO_3$	200	< 1	2000 – 2400
ALKALINITY	mg/L of $CaCO_3$	200	< 35	700 – 1000
TEMPERATURE	°C	30 – 35	30 – 35	30 – 35
OIL & GREASE	mg/L	10	NIL	NA *
OTHER HEAVY METALS	mg/L	NIL	NIL	NIL

BDL – below detectable limit, NA – not applicable; Values are system generated which may vary with variation in inlet & on operational basis

* Depends on the Biological Degradability of the Effluent, considering **12 Hours of Retention time for Biological Treatment** with **6 meters** of water depth and **available form of solubility.**

@ If the TDS of the RO permeate increases in the future as a result of hypochlorite dosing, we will recommend a UV system. Both hypochlorite consumption and the corresponding TDS rise will depend on the water characteristics.

Notes:

- All influent quality parameters are based on daily average values of a minimum of four (4) Nos. of hourly composite samples collected at regular intervals over a day, with testing performed to applicable industry-approved standards.
- The treated water parameters could take 2 months for attaining specified values as per above table after successful commissioning.
- The above recovery water quality expectation is based on WTT supplying the system and scope Equipment as per the scope of supply table described in section 4 below.

3. Equipment Details for Proposed Systems

PHASE – 1

3.1. Rotary Brush Screener

Automated Brush Screener separates coarse & medium fine solids of size above 2 mm from influent. This process is a predetermined stage where escaping of solids is completely avoided, where by clogging of pumps & machinery in subsequent steps gets nullified. The collected wastes have to be disposed periodically and the screener is attached with brush.

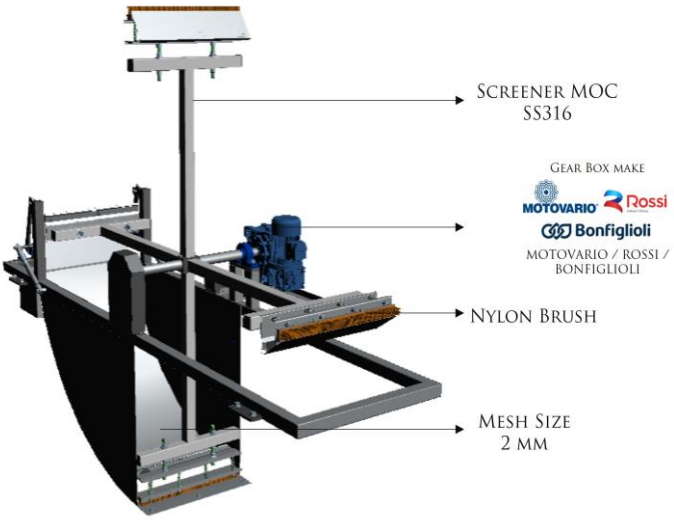

3.2. DISSOLVED AIR FLOTATION (DAF) SYSTEM

DAF system used to remove total suspended solids (TSS) and oils & greases (O&G) from effluent water; this effectively reduces the pollutant load in biological system. Circulation pump provided for the recirculation of Effluent into the DAF system along with Customer provided compressed air for flotation of suspends and oils. Scrapping mechanism provided for highly efficient separation of floating suspends and Oils & Greases.

3.3. EQUALIZATION SYSTEM

Equalization system used to homogenize different wastewater characteristics to achieve uniform pollutant load. The continuous mixing and water movement maintained by diffused aeration to avoid the dead zone, solids sedimentation and anaerobic fermentation.

3.4. NEUTRALIZATION SYSTEM

The Biological oxidation system requires a neutral or slightly alkaline pH value for the optimum performance. Neutralization is carried out automatically depending on the pH of the inlet water.

3.5. DENITRIFICATION SYSTEM

Anoxic digestion is a series of biological processes that occur in the absence of oxygen, where microorganisms break down biodegradable materials. A key component of this process is denitrification, which is the conversion of nitrate nitrogen into nitrogen gas in the absence of oxygen. The transformation follows a specific reduction pathway: Ammoniacal nitrogen is oxidized in Biological tank to nitrite and then into nitrate form. This nitrate (NO_3^-) is reduced to nitrite (NO_2^-), then to nitric oxide (NO), followed by nitrous oxide (N_2O), and finally to nitrogen gas (N_2) upon recirculating the Aerated treated water from Biological Tank to De-Nitrification Tank. This stepwise reduction is carried out by

specialized bacteria that use nitrogen compounds as electron acceptors instead of oxygen. The end product, nitrogen gas, is released into the atmosphere, effectively removing nitrogen from wastewater.

NH_4^+	→	**NO_2-**	→	**NO_3-**	→	**NO_2-**	→	**NO**	→	**N_2O**	→	**N_2**
Ammonia		Nitrite		Nitrate		Nitrite		Nitric Oxide		Nitrous Oxide		Nitrogen Gas

3.6. BIOLOGICAL OXIDATION SYSTEM

The organic matter is aerated in biological tank to bring down the pollutant load using micro-organisms. The micro-organisms metabolize the organic matters and a Part of organic matter is synthesized into new cells. The microbial growth in the wastewater maintaining by providing required DO level.

3.7. LAMELLA SETTLER

Lamella settler system removes solid particulates and suspend solids from liquid through gravity settling to provide polished influent for filtration process and also ensures the required retention time for settling of suspends.

3.8. DISINFECTION SYSTEM

The disinfection system ensures the safe quality of treated effluent by eliminating harmful microorganisms. Chlorine based chemical is dosed into the water as a powerful disinfectant. It reacts with pathogens, breaking down their cellular structure and rendering them inactive. This process ensures the water is safe for discharge or reuse for gardening.

3.9. SCREW PRESS SYSTEM

The Screw press system is for dewatering by continuous gravitational drainage. It works by using a coarse screw to convert the rotation of the handle or drive-wheel into a small downward movement of greater force. This system reduces the volume of sludge and in turn minimizes storage and transportation cost.

ADDITIONAL SYSTEMS ADDED IN PHASE – 2

3.10.SUBMERGED CERAMIC MBR SYSTEM

This system comprises of Eco-friendly & long-lasting Ceramic Membranes. Ceramic MBR system operates at low operational flux and easy to clean as the membrane is rigid and do not lose its form over a period of time. The system can be cleaned with Permeate & Chemically Enhanced Backwash technology and Air scouring to avoid sludge deposition. The sprinkler pumps ensure that there is no clogging over the membrane surface.

Water Loving Technology

ADDITIONAL SYSTEMS ADDED IN PHASE – 3

3.11.REVERSE OSMOSIS SYSTEM

Reverse Osmosis Process is the forced passage of water through a membrane against the natural osmotic pressure to accomplish separation of ions and water. It separates the dissolved salts from the feed water and reduces the TDS level, and this can be reused for industrial process. We can achieve lowest CAPEX and OPEX.

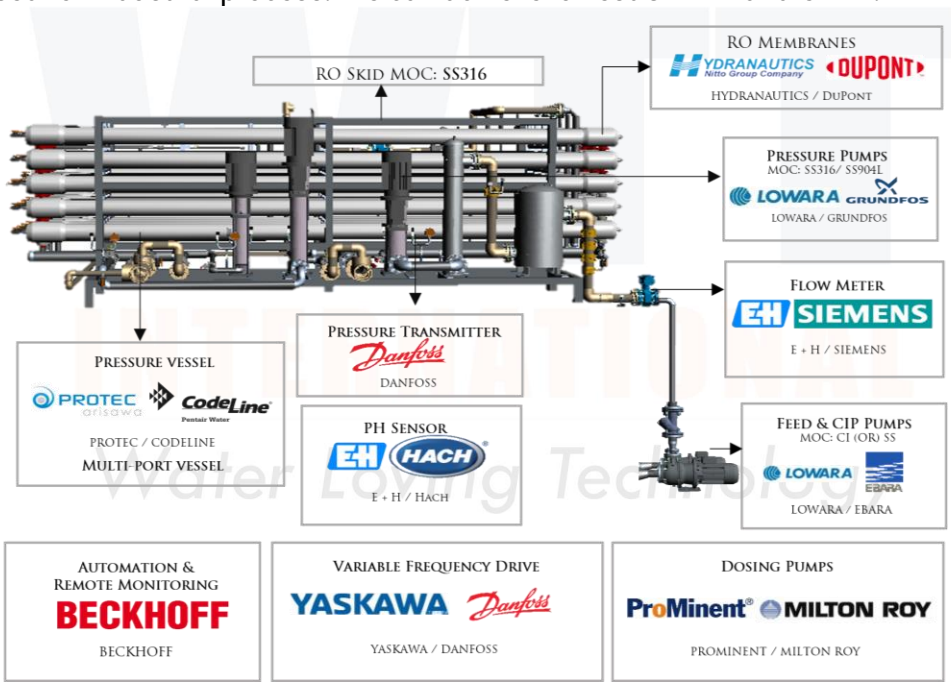

4. Equipment Scope of Supply – BY WTT

PLANT EQUIPMENT LIST (PHASE – 1)			
A	**BIOLOGICAL SYSTEM**		**250 M^3/DAY**
S.NO	**DESCRIPTION**	**SPECIFICATION**	**QUANTITY**
1.	SCREENER & LIFTING PUMP	ROTARY BRUSH SCREENER	1 No.
		MESH SIZE	2MM
		MOC	SS316
		LIFTING PUMP	1W + 1S
		PUMP MOC (CASING/IMPELLER)	CI / CI
		PUMP TYPE	SUBMERSIBLE
2.	DISSOLVED AIR FLOTATION (DAF) SYSTEM	DAF SYSTEM	1 No.
		DAF SCRAPPER MOC	NON-METALLIC
		DAF CIRCULATION PUMP	1W + 1S
		PUMP MOC (CASING/IMPELLER)	CI / SS
		PUMP TYPE	AIR-WATER SUCTIONING TYPE (**NANO BUBBLE GENERATION PUMP**)
		SLUDGE PUMP	1W + 1S
		PUMP MOC (CASING/IMPELLER)	CI / CI
		PUMP TYPE	SURFACE MOUNTED
3.	EQUALIZATION TANK	DIFFUSER	8 No's
		DIFFUSER SIZE	11"
		DIFFUSER PORES SIZE	80 MICRON
		DIFFUSER TYPE	FINE BUBBLE
		DIFFUSER MOC	PP-GF disc with SILICON membrane
		DIFFUSER GRID PIPING MOC	SS316L
4.	BIOLOGICAL FEED SYSTEM	BIOLOGICAL FEED PUMPS	1W +1S
		PUMP MOC (CASING/IMPELLER)	CI / CI

		PUMP TYPE	SUBMERSIBLE
		LEVEL TRANSMITTER	1 No.
		pH SENSOR	1 No.
		pH SENSOR RANGE	0 – 14
		NEUTRALIZATION DOSING PUMPS	1W + 1SS
		PUMP MOC	TEFLON
		ELECTROMAGNETIC FLOWMETER	1 No.
5.	DENITRIFICATION SYSTEM	DENITRIFICATION PUMP	1W + 1S
		PUMP MOC (CASING/IMPELLER)	CI/CI
		PUMP TYPE	SUBMERSIBLE
		FLOW MIXER FOR DENITRIFICATION SYSTEM	1
		FLOW MIXER PROPELLER MOC	SS
6.	BIOLOGICAL SYSTEM	BLOWER FOR BIOLOGICAL & EQUALIZATION TANK AERATION	1W + 1S
		BLOWER TYPE	LOBE
		DO SENSOR	1
		DO SENSOR RANGE	0 – 5 PPM
		DIFFUSER	102 No's
		DIFFUSER SIZE	11"
		DIFFUSER PORES SIZE	80 MICRON
		DIFFUSER TYPE	FINE BUBBLE
		DIFFUSER MOC	PP-GF disc with SILICON membrane
		DIFFUSER GRID PIPING MOC	SS316L / PP-GF
7.	LAMELLA SETTLER & SLUDGE RECIRCULATION	LAMELLA SETTLER	1 LOT
		LAMELLA SETTLER FRAME MOC	SS316
		LAMELLA PACKS MOC	PVC
		SLUDGE RECIRCULATION PUMP	1W + 1S

	SYSTEM	PUMP MOC (CASING/IMPELLER)	CI / CI
		PUMP TYPE	SUBMERSIBLE
8.	SLUDGE THICKENER & SCREW PRESS	PIPING FOR SLUDGE THICKENER	1 LOT
		PIPING MOC	SS316L
		SCREW PRESS SYSTEM	1
		SCREW PRESS FEED PUMPS	1W + 1S
		SCREW PRESS POLY DOSING PUMPS	1W + 1SS
		POLY PREPARATORY UNIT	1
9.	DISINFECTION SYSTEM @	CIRCULATION PUMP	1W + 1S
		TYPE OF PUMP	SURFACE MOUNTED
		DIFFUSER	2 No's
		DIFFUSER SIZE	11"
		DIFFUSER PORES SIZE	80 MICRON
		DIFFUSER TYPE	FINE BUBBLE
		DIFFUSER MOC	PP-GF disc with SILICON membrane
		DIFFUSER GRID PIPING	1 LOT
		DOSING PUMP	1W + 1SS
		DOSING PUMPS MOC	PP

@ The disinfection system proposed in Phase 1 will be utilized for disinfection of MBR permeate during Phase-2 & RO permeate during Phase-3.

B	SUBMERGED CERAMIC MBR SYSTEM (PHASE - 2)		250 M^3/DAY
S.NO	**DESCRIPTION**	**SPECIFICATION**	**QUANTITY**
10.	SUBMERGED CERAMIC MBR SYSTEM	NO. OF MODULES	1 LOT
		NO. OF TRAINS	1
		MOC OF MODULE	CERAMIC
		PERMEATE/BACKWASH PUMP	1W + 1S

		PUMP MOC (CASING/IMPELLER)	CI / CI
		TYPE OF PUMP	SURFACE MOUNTED
		SLUDGE TRANSFER PUMP	1W + 1S
		PUMP MOC (CASING/IMPELLER)	CI / CI
		PUMP TYPE	SURFACE MOUNTED
		DOSING PUMP	2W
		DOSING PUMP MOC	PP
		ELECTROMAGNETIC FLOW METER	PERMEATE

C	REVERSE OSMOSIS SYSTEM (PHASE - 3)		250 M^3/DAY
S.NO	**DESCRIPTION**	**SPECIFICATION**	**QUANTITY**
11.	REVERSE OSMOSIS SKID	**TOTAL NUMBER OF SKIDS**	**1**
		SKID MOC	SS316
		NUMBER OF ARRAYS	3
		RO FEED PUMP	1W + 1S
		PUMP MOC (CASING/IMPELLER)	CI / CI
		PUMP TYPE	SURFACE MOUNTED
		PRE-FILTER	1 LOT
		PRE-FILTER HOUSING MOC	SS316
		DOSING PUMPS	3W + 1SS
		DOSING PUMPS MOC	PP
		DOSING TANKS	2
		DOSING TANK MOC	LDPE
		HIGH PRESSURE PUMP WITH INVERTER	1W
		HIGH PRESSURE PUMP MOC	SS316

		HIGH PRESSURE PUMP TYPE	VERTICAL- MULTI STAGE
		PRESSURE VESSELS	4 No's
		PRESSURE VESSELS MOC	FRP
		RO MEMBRANES	18 No's
		RO MEMBRANES MOC	COMPOSITE POLYAMIDE
		pH SENSOR	1
		PRESSURE INDICATOR	6
		PRESSURE TRANSMITTER	6
		ELECTROMAGNETIC FLOWMETER	2 No's (RO FEED, COMMON PERMEATE LINE)
		ROTAMETER	3 NOS. (INDIVIDUAL PERMEATE LINE)
		CIP SINGLE SKID WITH AUTOMATION (INCLUSIVE OF PUMPS WITH ITS FILTER, FLOWMETER, PRESSURE TRANSMITTER, AUTO VALVES & DOSING PUMPS)	1 SET

W – Working; S – Standby; SS – Store Standby

Specification and quantity details mentioned above are preliminary and may be revised to optimize the performance of the system.

OTHER GENERAL ITEMS IN WTT's SCOPE:

- *Piping in SS, UPVC and its associated items*
- *All other related valves and puddle flanges required*
- *Electrical control panel for proposed system with standard automation*
- *Power cable and control cable within the electrical panel*
- *Power cable and control cable from electrical panel to proposed equipment*
- *General layout & civil detailed drawing for proposed systems*

5. Scope of Supply & Installation - BY CLIENT

- Installation of supplied Equipment.
- Transfer of Influent up to proposed Screener system.
- All civil related and excavation works, civil structural drawings, underground piping & piping for electrical cabling during civil works.
- Chemical supply and Bulk chemical storage tanks (with fume absorber for acid tanks) for proposed systems based on the available optimum level of chemical procurement
- Raw / Permeate water transfer for cleaning of Proposed Filtration system
- Raw water supply for whole plant and treated water transfer
- Compressed air for DAF and pneumatic panel for proposed systems
- Air conditioning Systems for Panel room & Personal Computers
- Optimum Bacteria for biological tanks during commissioning & operation
- All loading & unloading @ site
- Sludge disposal during plant commissioning & operation
- Utilities like Power, Steam, Welding gas, Hot water etc., if Required
- Separate panel, wiring with fans & lights for whole plant & its power supply
- Incomer cable & its connections with WTT supplied electrical panel and stabilized power supply
- All Necessary Earthing & Safety/Protective Earthing shall be provided for individual Instruments, Motor/Pump, Other Electrical Equipment & Panel as per requirement Input power to individual WTT supplied electrical panel
- Pre-Shipment Inspection requested by the local authorities.
- All license fees and / or custom duties.
- Provide Food (3 meals a day), Accommodation with attached sanitary facility (Hotel/Guest House) and Local transport to the team of WTT during all kinds of deputations
- Installation consumables (such as welding electrodes, cutting disk and others).
- Supply and assembly of all drainage lines for rain water, sewers, etc.
- Any construction approval from local Authorities.
- Supply of any hoisting and/or laying equipment (cranes forklift, etc.) both truck mounted or not.
- Construction of site fencing/railing.
- Protection for all field instruments, local switches, motors, etc.,
- Safety handrails for all tanks, safety items like life buoy rings, eye washer, life-jackets, etc.
- Removal of all residual debris after construction and thorough cleaning of all tanks before plant start-up.
- Any further item not described in our offer.

HIGHLIGHTS

- *Our scope of supplies is of **SS316L pipes for Airline, MBR & RO pipe line** materials like UPVC are used only in areas where SS316L is not compatible.*
- *Rotary Brush Screener fabricated at a world class manufacturing facility with SS316 having sturdy axial rotating brush arm with long-lasting **Nylon Bristles** enables screening by employing punched hole sheets up to **mesh size of 2mm**.*
- ***DO Sensor** based Automation for Biological Aeration to maintain balanced F/M ratio.*
- *Diffusers made of long-lasting **PP-GF Silicon membrane** and enables utmost mixing by fine bubbles.*
- *Submerged CERAMIC MBR system with a **higher membrane life** and auto cleaning capabilities*
- ***Rapid Filtration & Backwash Sequence** with automatic valves for pre-filtration.*
- *All part of the plant has **Level sensors and floats** to have complete data on volume of water in each tank.*
- ***Individual pressure transmitters for Inlet & Outlet** of each array in RO to know exactly where the fouling has occurred and to initiate cleaning for that specific stage.*
- ***STATE OF ART SINGLE SKID of CIP system** for RO with full automation including dosing of chemicals with pH automation and flow with pressure control.*
- *Electrical panel supplied by WTT with necessary cooling technologies and easy operative switch for Automatic & Manual operations.*
- ***PC controlled HMI panel** provided with complete automation and acknowledgement & warnings for cleaning necessities based on the operating conditions.*

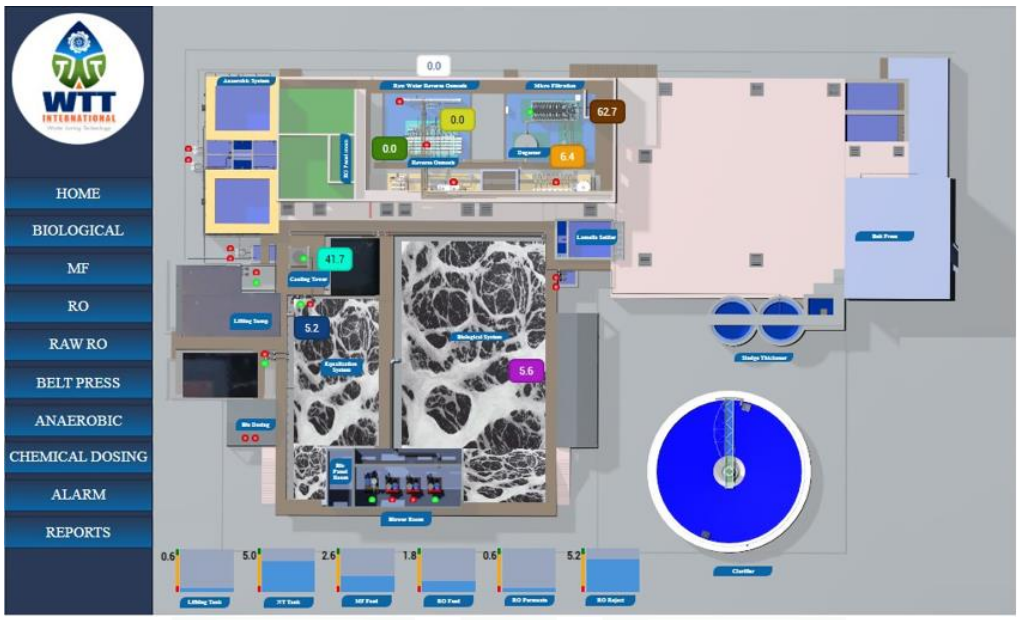

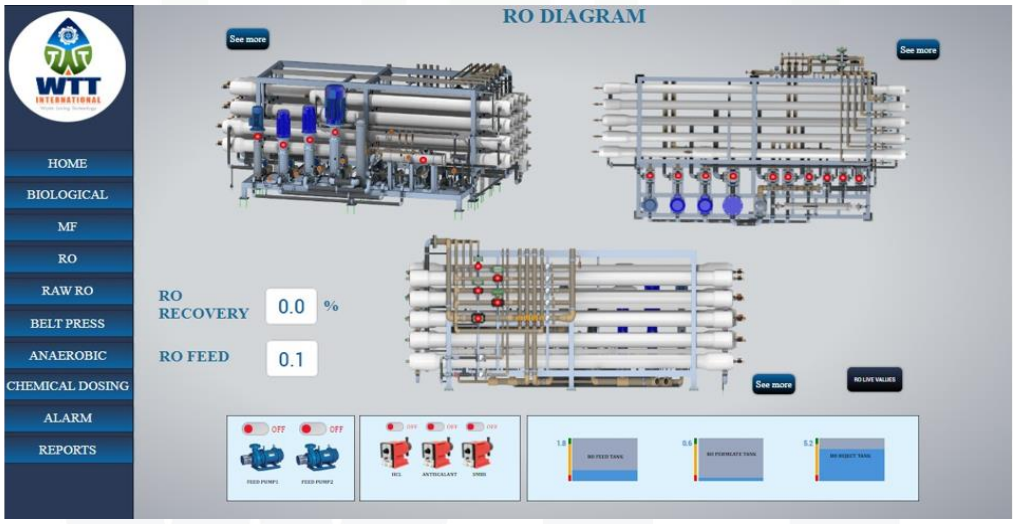

Sample of our HMI screens and is a tentative reference

*Making the plant In-hand through **SCADA** for Live Data monitoring using a smartphone (or) PC.*

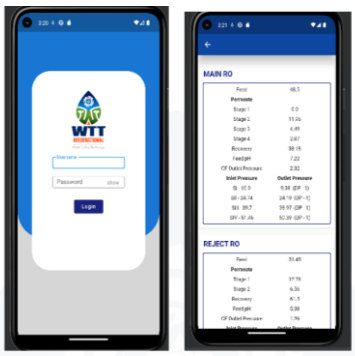

REMOTE DATA MONITORING

6. TYPICAL EQUIPMENT VENDOR LIST

S.NO	EQUIPMENT	VENDORS
1.	DIFFUSER	OTT / GEOTIERRE
2.	BLOWER	ROBUSCHI
3.	SUBMERSIBLE PUMP	GRUNDFOS / XYLEM / EBARA
4.	PRESSURE PUMP	GRUNDFOS / LOWARA
5.	SURFACE MOUNTED PUMP	EBARA / LOWARA
6.	DOSING PUMP	PROMINENT / MILTON ROY
7.	RO MEMBRANES (PHASE – 3)	HYDRANAUTICS / DUPONT
8.	PRESSURE VESSELS	PROTEC / CODELINE / ROPV / DAX / XLINE
9.	VARIABLE FREQUENCY DRIVE	YASKAWA
10.	ELECTROMAGNETIC FLOWMETER	E+H / SIEMENS
11.	INLINE ANALYZERS	E+H / HACH / PROMINENT
12.	LEVEL TRANSMITTER	E+H / PUNE TECTROL
13.	LEVEL FLOAT	FAES
14.	PRESSURE TRANSMITTER	DANFOSS
15.	PRESSURE GAUGE	FORBES MARSHALL

16.	AUTOMATION	BECKHOFF / SIEMENS
17.	ELECTRICAL PANEL	RITTAL / HOFFMAN
18.	ELECTRICAL CABLE	LAPP
19.	SCREENER	**WTT INTERNATIONAL**
20.	DAF SYSTEM	
21.	LAMELLA SETTLER	
22.	DISINFECTION SYSTEM	
23.	SCREW PRESS	
24.	CERAMIC MBR **(PHASE – 2)**	
25.	RO SKID **(PHASE – 3)**	

The above-mentioned vendors are subjected to change based on the delivery terms for an equivalent vendor without compromising the quality and WTT reserves the right to change the vendor without any prior intimation.

7. Pricing Detail

PRICE FOR PROPOSED SYSTEMS – (PHASE – 1)		
S.NO	**SYSTEM/EQUIPMENT - 250 M^3/DAY**	**PRICE IN USD**
1.	**BIOLOGICAL SYSTEM** (WHICH INCLUDES SCREENER, LIFTING PUMP, DAF, EQUALIZATION SYSTEM, NEUTRALIZATION SYSTEM, DENITRIFICATION SYSTEM, BIOLOGICAL SYSTEM, LAMELLA SETTLER, SRS & SCREW PRESS) & **DISINFECTION SYSTEM**	**$ 304,351**
TOTAL PRICE FOR PROPOSED SYSTEMS		**$ 304,351**

PRICE FOR PROPOSED SYSTEMS – (PHASE – 2)		
S.NO	**SYSTEM/EQUIPMENT - 250 M^3/DAY**	**PRICE IN USD**
1.	**SUBMERGED CERAMIC MBR SYSTEM**	**$ 166,488**
TOTAL PRICE FOR PROPOSED SYSTEMS		**$ 166,488**

PRICE FOR PROPOSED SYSTEMS – (PHASE – 3)		
S.NO	**SYSTEM/EQUIPMENT - 250 M^3/DAY**	**PRICE IN USD**
1.	**REVERSE OSMOSIS SYSTEM** (**90% RECOVERY** IN 3 ARRAYS)	**$ 135,043**
TOTAL PRICE FOR PROPOSED SYSTEMS		**$ 135,043**

- Pricing provided herein does not include any duties and taxes
- Pricing provided herein is on **Ex-Works** basis & does not include the insurance charges
- Supervision of erection and commissioning of WTT supplied system shall be extra
- Payment/commercial terms & conditions as per WTT's General Terms & Conditions of sale
- Price valid for 15 days from the date of proposal due to market volatility

8. Happy Customers

AND 12 CETPs ACROSS THE COUNTRY

9. Channel Partners

10. Process Description Video

11. Commercial Terms and Conditions

11.1. TAXES

Taxes and Duties shall be extra as applicable. Pricing provided herein does not include any taxes of destination country.

If Tax Exemption is applicable, customer has to provide a copy to WTT of any applicable tax exemption certificates as issued by an approved taxation authority for the specific project location. Without an approved tax exemption certificate received by WTT all submitted invoices will include applicable tax. However, we reserve the right to revise our price in case of tax exemption.

11.2. FREIGHT

All the Equipment and components foresee **Ex-works** delivery as per I.C.C. Incoterms-2010.

11.3. INVOICING AND PAYMENT TERMS

The pricing quoted in this proposal is based on the following payment terms, in principally agreed.

(1) 30% Advance Payment along with PI.

(2) 70% by irrevocable Letter of Credit payable at sight against Shipment documents.

Equipment shipment is contingent on receipt of earlier milestone payments.

11.4. EQUIPMENT SHIPMENT

Client and WTT will arrange a kick off meeting after contract acceptance to develop firm shipment schedule. This estimated delivery schedule assumes no more than 1 week for Client review of submittal drawings. Any delays in Client approvals or requested changes may result in additional charges and/or a delay to the schedule.

Material supply for the proposed plant in 5 - 6 months is expected. The delivery schedule excludes the months of August & December, the delivery schedule is subject to review and adjustment. Partial shipments are allowed. In case of modifications to the volume of the supply after the emission of the order confirmation, WTT reserves the right to modify the delivery time and the agreed price.

11.5. FORCE MAJEURE

Please be advised that force majeure is applicable to the quotation provided. The unforeseen and uncontrollable events as defined in our terms and conditions, such as natural disasters, wars or pandemics & other events that prevent the parties from fulfilling their contractual commitments have occurred, impacting our ability to honor the terms outlined in this quotation. We will diligently review the situation and promptly communicate any necessary adjustments or potential delays in fulfilling the quoted services or products in compliance with the force majeure provisions outlined in our agreement.

11.6. PRICING NOTES

All prices are quoted in **USD**. Any applicable tax of destination country is not included. Client will pay all applicable Local, State / Provincial, or Federal taxes & Duties. WTT may manufacture and source the Equipment and any part thereof globally in the country or countries of its choosing, provided that the Equipment complies with all of the requirements specified in this Agreement.

The Equipment delivery date, start date, and date of commencement of operations are to be negotiated. Title and risk of loss will transfer upon delivery in accordance with the INCOTERMS 2010. Commercial Terms and Conditions shall be in accordance with WTT's General Terms and Conditions of Sale as included in Appendix.

12. CLIENT SCOPE OF SUPPLY

12.1. SAFETY AND ENVIRONMENTAL

First aid, emergency medical response, eyewash & safety showers in the water treatment area. Chemical spill response, security & fire protection systems as per local codes. Environmental use and discharge permits for all chemicals at Client facility either listed in this document or proposed for use at a later date. Any special permits required for WTT's or Client employees to perform work related to the water treatment system at the facility. All site testing, including soil, ground and surface water, and air emissions, etc. Disposal of all solid & liquid waste from WTT's system including waste materials generated during construction, startup and operation.

Provide appropriate protection of the environment & local community, the health and safety of all workers and visitors at the site and the security of the facility. Provide safety related equipment & services such as site security, fire systems, lifting equipment and its operation, fall protection, adequate floor grating, ventilation, and safe access to equipment & electrical systems areas.

Equipment and trained support personnel for any confined space entry required during equipment installation/startup/commissioning/servicing. For permit-required confined space entry, a qualified rescue team on stand-by and available to respond within 4 minutes of an emergency.

Client will identify and inform WTT's personnel of any hazards present in the work place that could impact the delivery of WTT's scope of supply and agrees to work with WTT to remove, monitor, and control the hazards to a practical level. Client will provide training to WTT's personnel on all relevant & standard company operating procedures and practices for performing work on site.

12.2. JOBSITE AND INSTALLATION REVIEW

Review of WTT's supplied equipment drawings and specifications. All easements, licenses and permits required by governmental or regulatory authorities in Connection with the supply, erection and operation of the system.

Overall plant design, detail drawings of all termination points where WTT's equipment or Materials tie into equipment or materials supplied by others Stamping, signing or Sealing General drawings as per State, or local regulations or codes. All applicable civil design and works, including any building, site preparation, grading, excavations, foundations and trenches and accessories.

All electrical Labor and supplies leading up to jobsite including fittings, conduit, supports, cable trays, wire and hardware, air-conditioning of panels required to appropriately ground / earth the equipment as required for installation and ongoing operations.

All mechanical Labor and supplies leading up to jobsite including interconnecting piping, heat tracing (if required), fittings, conduit, pipe supports, and hardware as required for installation and ongoing operations. All instrumentation and automatic pneumatic valves

including but not limited to; air/sample line tubing, fittings, conduit, supports, isolating valves as required for installation and ongoing operations. Loading, unloading and transportation of equipment, materials required for WTT to perform duties outlined in WTT's Scope of Supply to the jobsite and/or warehouse.

Client will provide all access structures (scaffolding), mechanical lifting equipment (cranes, forklifts, scissor lifts, etc.), suitable site/shelter for placement of the proposed equipment, either inside appropriate housing, or outdoors.

Precaution: electrical equipment including the PLC may require air-conditioned rooms to prevent overheating of sensitive electronic equipment depending on climatic conditions. Bulk chemical storage and tanks, including secondary containment in accordance with local codes. Client will receive, off-load, log, and store all chemical and materials in accordance with Manufacturer's recommendation that are shipped. Compressed instrument air for pneumatic valves instruments and ejector system Equipment anchor bolts, Laboratory services, operating and maintenance personnel during equipment checkout, start-up and operation. Any on-site painting or touch-up painting of equipment supplied. Disposal of any Preservative.

For erection, WTT will ship the accessories such as pipes, bolts, nuts, screws, cables, valves any other equipment or devices in excess quantities than required. This is in order to avoid shortages during the assembly due to damage or any other cause as it is difficult to procure the accessories locally. It is notified that all the shipped accessories during assembly and the excess accessories after commissioning are always remain the properties of WTT. WTT has the authority to retake the same at any period of time, even before and after commissioning. It is client's responsibility to preserve the above-mentioned items till WTT takes back the same.

12.3. START-UP AND COMMISSIONING

Installation & removal of temporary screens on all process lines Flushing and disinfection of all piping and tanks (including process equipment tanks) and verification of removal of all residual debris from construction. Alignments & required materials for rotating equipment MEG testing of all field motor power wiring (as required). Continuity checks for all electrical field wiring as per Installation Checklist, Hydro-testing of all field installed piping.

Supply raw materials, oil/lubricants chemicals and utilities during start-up and operation. Electrical & Mechanical support labor for commissioning activities, loading of membranes, stacks, modules, etc.

12.4. FACILITY MANAGEMENT

Client will provide such warehouse storage space and facilities, as are available at the site, and are reasonably appropriate to store parts, consumables, tools, etc. in accordance with manufacturer's recommendations. Such warehouse storage space will be a segregated area, secured and protected from adverse climate as may reasonably be required. The storage area shall be facilitated with 24 hours lock & key with security and Client will be responsible for risk of loss of WTT's parts while in storage at the site. Client will maintain WTT's parts stored at the site free & clear of any and all liens of Client and lenders, bondholders, contractors & other creditors of any nature.

Client will afford WTT's personnel free access and egress of the facility for all authorized work. Provide workshop facilities/area with roof and stabilized power supply, as is reasonably appropriate to carry out machining/fabrication works.

Provide adequate illumination and emergency lighting for all areas in which the WTT will be executing the scope of supply. Identify a Client project contact person to be available to WTT's personnel to address any issues related to WTT's execution of WTT's scope of work. Responsible for the equipment for movement of chemical drums, totes, and resins, as is reasonable. Provide all site utilities such as raw water, instrument quality air, potable water and power required for operation of the proposed equipment included in this scope of supply.

12.5. CONDITIONAL OFFERING

Client understands that this order confirmation has been issued based upon the information provided by Client and currently available to, WTT at the time of proposal issuance. Any changes or discrepancies in site conditions (including but not limited to system influent characteristics, changes in Environmental Health and Safety ("EH&S") conditions, and/or newly discovered EH&S concerns), Client financial standing, Client requirements, or any other relevant change, or discrepancy in, the factual basis upon which this proposal was created, may lead to changes in the offering, including but not limited to

changes in pricing, warranties, quoted specifications, or terms and conditions. WTT's offering in this proposal is conditioned upon a full WTT EH&S.

13. APPENDIX

13.1. APPENDIX A: CLARIFICATIONS

- Pump MOC has been considered as per WTT standard practice.
- The Equipment in WTT scope will be procured as per WTT Standard Vendor List.
- WTT has not envisaged third party equipment inspection before dispatch.
- The payments received once could not be processed again for refund.
- WTT has considered instruments as per WTT standard practice
- Painting specifications of WTT supplied equipment is as per standard manufacturer painting specifications.

13.2. APPENDIX C: WARRANTY

The mechanical warranty is only applicable to equipment supplied by WTT. The mechanical warranty period on all equipment supplied, unless otherwise noted, is twelve (12) months from the date of installation or fourteen (14) months from the notification of material readiness, whichever occurs first. WTT's obligation under this warranty is to the repair or replace, of any device or part thereof, which shall prove to have been manufacturing defects.

This warranty excludes the electrical items, defects, failures, damages or performance limitations caused in whole or in part by normal wear & tear, power failures, surges, fires, floods, snow, ice, lightning, excessive heat or cold, highly corrosive environments, accidents, actions of third parties, or other events outside of WTT's control. Warranty period for the entire equipment including replaced or repaired parts will be limited to the unexpired portion of the total warranty period. Bought out components are guaranteed only to the extent of guarantees given to us by our suppliers.

WTT assumes no liability for any damage to equipment caused by inadequate storage or handling as per manufacturer's recommendations in supplied technical literature, or by defective or sub-standard workmanship or materials provided by Client or any other third party responsible for handling, storing or installing the equipment. Client undertakes to

give immediate notice to WTT if goods or performance appear defective and to provide WTT with reasonable time and opportunity to make inspections and tests. If WTT is not at fault, Client shall pay WTT the costs and expenses of the inspections and tests.

Goods shall not be returned to WTT without WTT's permission. WTT will provide Client with a "Return Goods Authorization" (RGA) number to use for returned goods. All return costs associated with shipping and labor are not included in the mechanical warranty. WTT warrants, subject to the provisions herein after set forth, that after stable operation of the WTT system has been attained and operators have acquired reasonable skills, the Equipment supplied for this project will be capable of producing the results set forth in stage wise parameter table, provided that:

The Equipment is operated and maintained at all times in accordance with the WTT Operations and Maintenance manual, The Equipment is operated within the mixed liquor characteristics defined in Influent quality table of this section, WTT has, until performance of its obligation herein is met, reasonable access to the Equipment and the operational data relating thereto, Client furnishes adequate and competent operating, supervisory and maintenance staff, and necessary laboratory facilities with test equipment and personnel, Client utilizes the services of WTT until its performance obligations are met, Client supplies all necessary raw materials and services of a quantity and of a quality specified by WTT, An adequate and continuous power supply is available that will enable operation of all required equipment.